SPLIT SHAFT GAS TURBINE

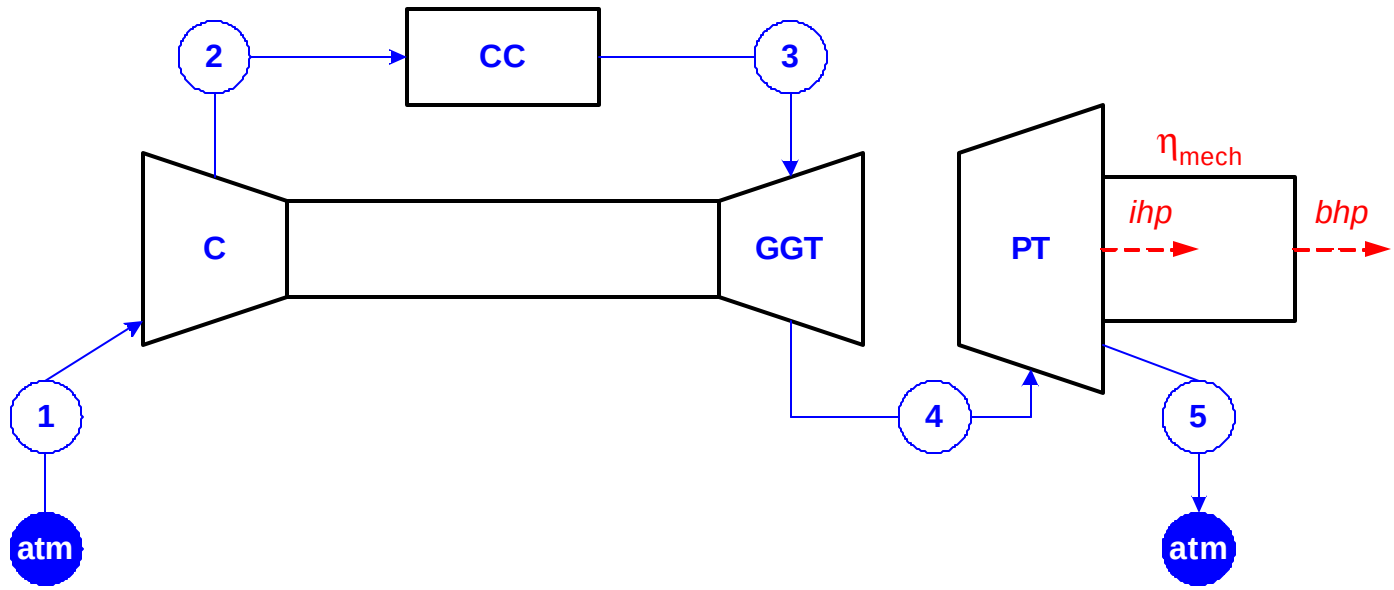

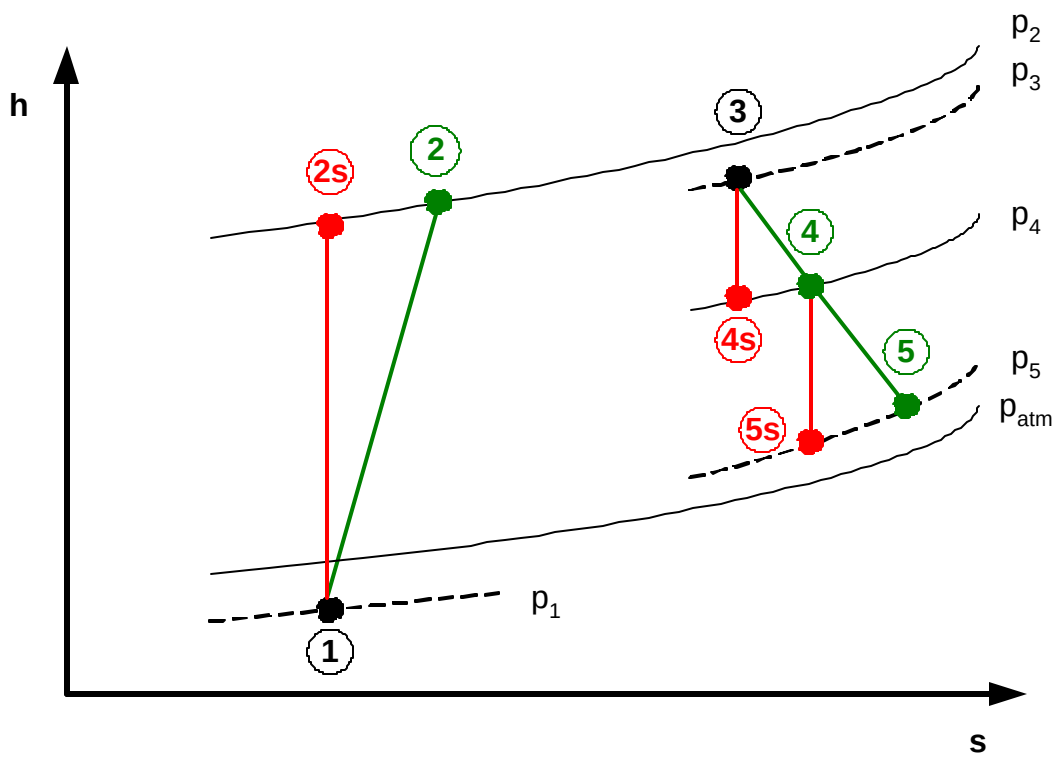

Key difference between split shaft and single shaft:

$$w_C = w_{GGT} \rightarrow h_2 - h_1 = h_3 - h_4$$

Net work of the cycle is a function of actual power turbine work only:

$$w_{NET} = w_{PT} = h_4 - h_5$$

SPLIT SHAFT GAS TURBINE PROPERTIES TABLE

$p_1 = p_{ATM} - \Delta p_{IN}$

$p_3 = p_2 - \Delta p_{CC}$

$p_5 = p_{ATM} + \Delta p_{OUT}$

	1	2s	2	3	4s	4	5s	5
p [psia]								
T [^{o}R]								
h [Btu/lb$_m$]								
Pr								

$$\frac{p_{2s}}{p_1} = \frac{\mathrm{Pr}_{2s}}{\mathrm{Pr}_1}$$

$$\frac{p_3}{p_{4s}} = \frac{\mathrm{Pr}_3}{\mathrm{Pr}_{4s}}$$

$$\frac{p_4}{p_{5s}} = \frac{\mathrm{Pr}_4}{\mathrm{Pr}_{5s}}$$

$$h_C = \frac{h_{2s} - h_1}{h_2 - h_1}$$

$$h_{GGT} = \frac{h_3 - h_4}{h_3 - h_{4s}}$$

$$h_{PT} = \frac{h_4 - h_5}{h_4 - h_{5s}}$$

$$h_{CC} = \frac{\dot{m}_{AIR}(h_3 - h_2)}{\dot{m}_{FUEL}(LHV)}$$

Note: For split shaft GT (only)

$h_2 - h_1 = h_3 - h_4$